SENSACIONAL 2

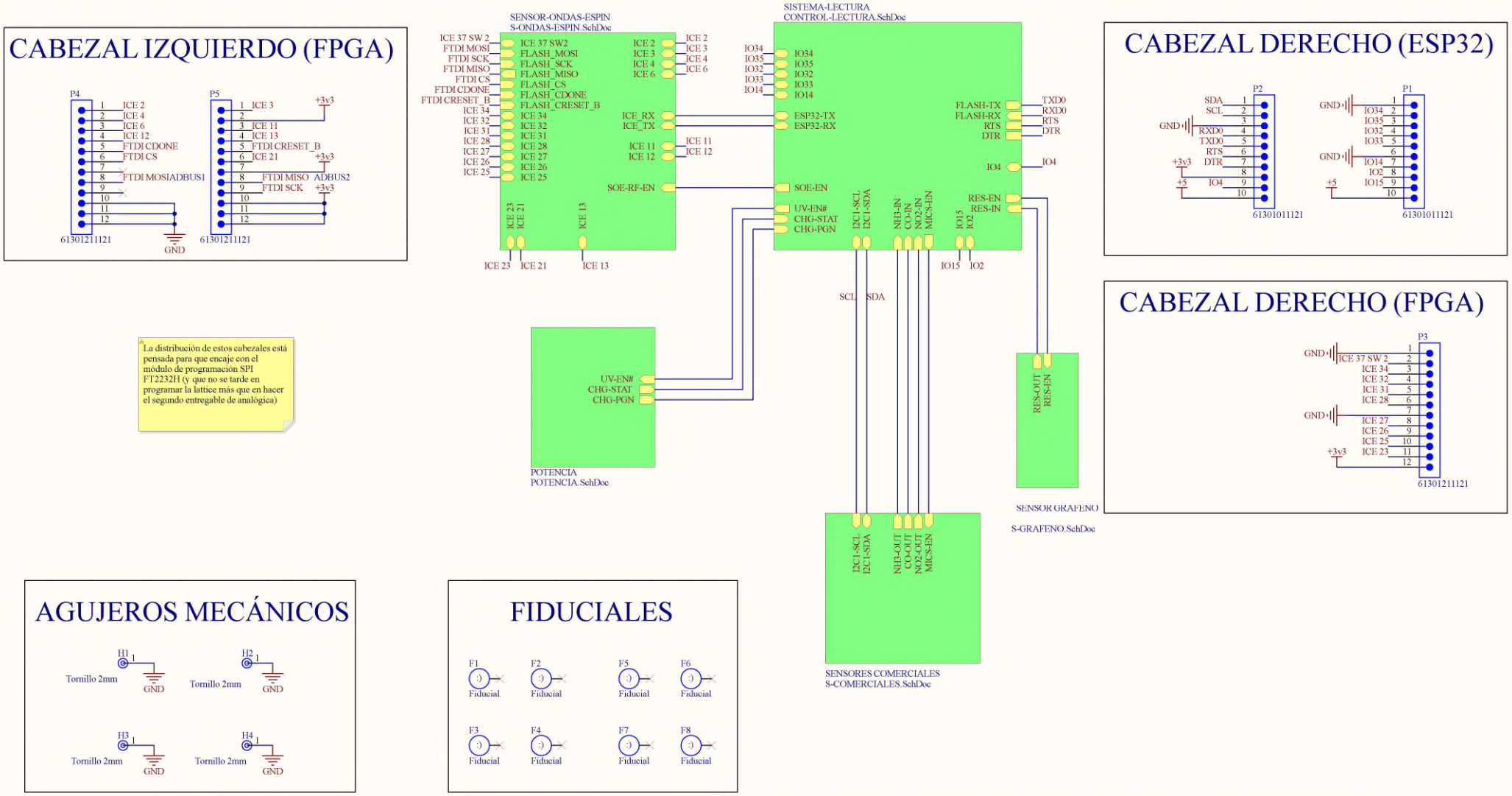

Title: *SENSACIONAL 2 - PRINCIPAL*		**Author:** MARIO DE MIGUEL	
		Approved: ---	
Size: A3	**Prj:** SENSACIONAL 2	**Edited:** 04/02/2026	
Date: 04/02/2026 11:04:10	Sheet 1 of 7	**Variant:** [No Variations]	
Git Hash: Not in version control		**SW Version:** 25.3.3.18	
File: C:\Users\worbb\Desktop\IMA\PCB\Altium\SENSACIONAL - V2\PRINCIPAL.SchDoc			

CONTROL Y LECTURA

BOTONES (RESET, BOOT)

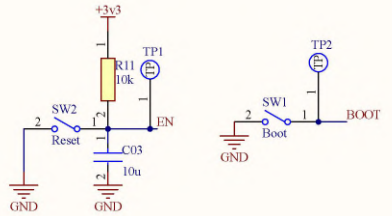

MÓDULO ESP32-WROOM

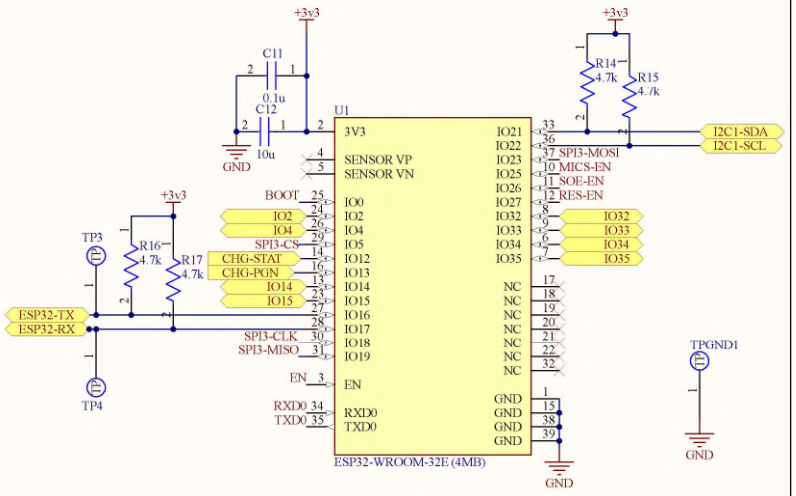

TRASLACIÓN DE NIVELES 3.3V - 5V

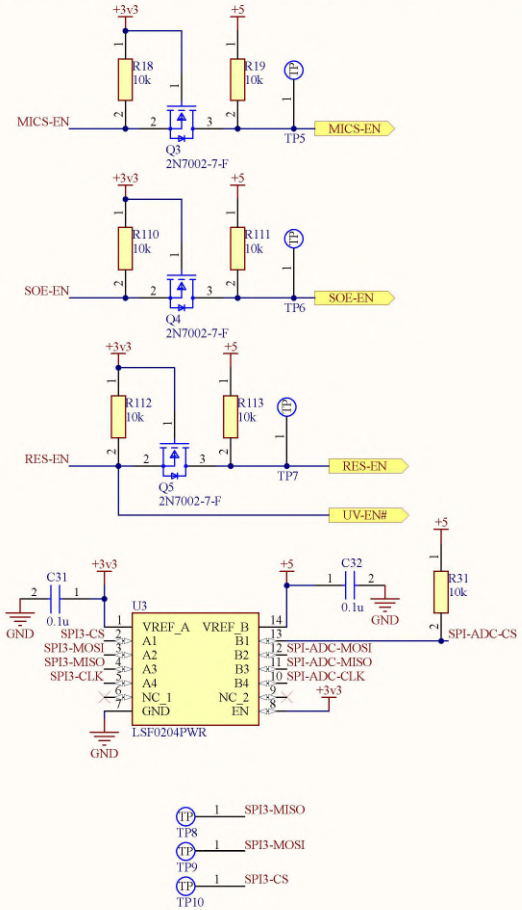

PROGRAMACIÓN UART ESP32

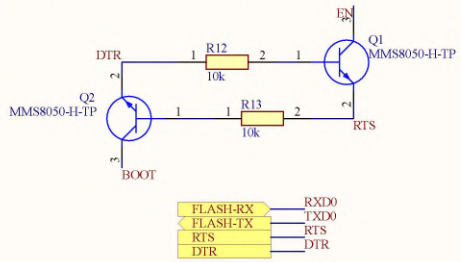

ADC 5V

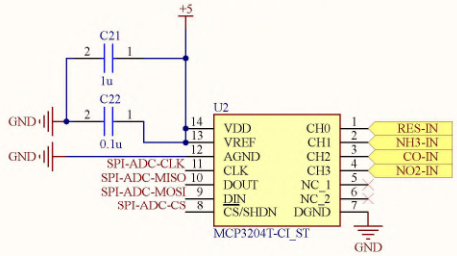

Title: *CONTROL - LECTURA*		**Author:** MARIO DE MIGUEL	
		Approved: ---	
Size: A3	**Prj:** SENSACIONAL 2	**Edited:** 04/02/2026	
Date: 04/02/2026 11:04:10	Sheet 2 of 7	**Variant:** [No Variations]	
Git Hash: Not in version control		**SW Version:** 25.3.3.18	
File: C:\Users\worbb\Desktop\IMA\PCB\Altium\SENSACIONAL - V2\CONTROL-LECTURA.SchDoc			

GESTIÓN DE ALIMENTACIÓN

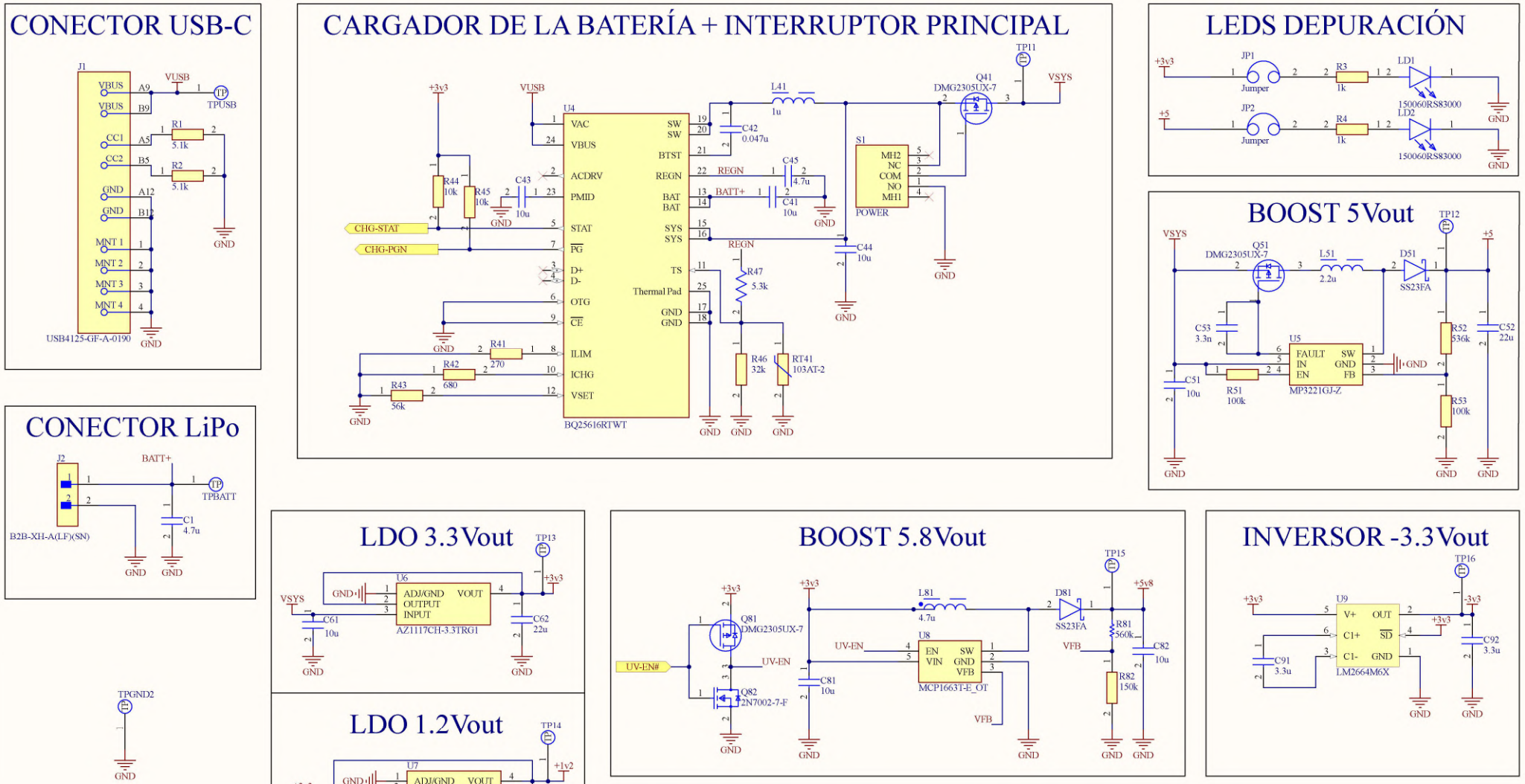

Title: *GESTIÓN DE POTENCIA*		Author: MARIO DE MIGUEL	
Size: A3	Prj: SENSACIONAL 2	Approved: ---	
Date: 04/02/2026 11:04:10	Sheet 3 of 7	Edited: 04/02/2026	
Git Hash: Not in version control		Variant: [No Variations]	
File: C:\Users\worbb\Desktop\IMA\PCB\Altium\SENSACIONAL - V2\POTENCIA.SchDoc		SW Version: 25.3.3.18	

SENSORES COMERCIALES

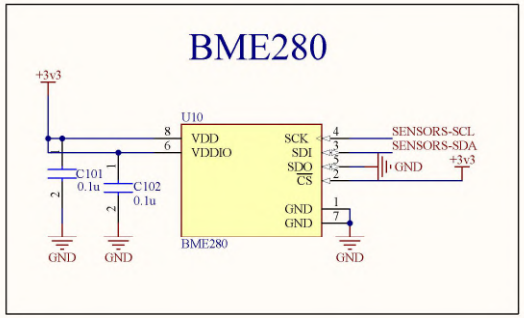

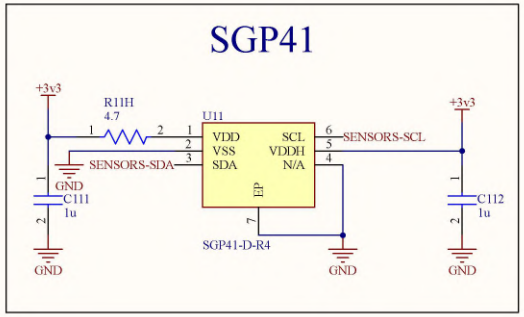

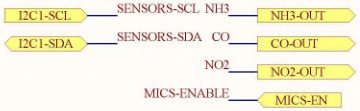

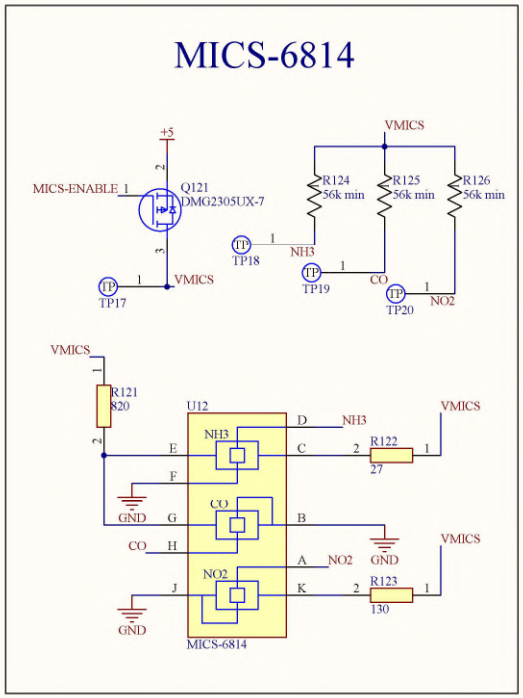

Title: *SENSORES COMERCIALES*		**Author:** MARIO DE MIGUEL	
		Approved: ---	
Size: A3	**Prj:** SENSACIONAL 2	**Edited:** 04/02/2026	
Date: 04/02/2026 11:04:10	Sheet 4 of 7	**Variant:** [No Variations]	
Git Hash: Not in version control		**SW Version:** 25.3.3.18	
File: C:\Users\worbb\Desktop\IMA\PCB\Altium\SENSACIONAL - V2\S-COMERCIALES.SchDoc			

SENSOR DE GRAFENO

RES-EN — RES-ENABLE
RES-OUT — RES-VOUT

SENSOR ON-OFF

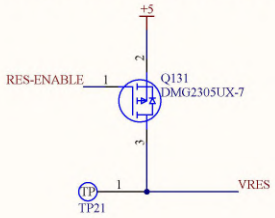

AMPLIFICADOR DIFERENCIAL

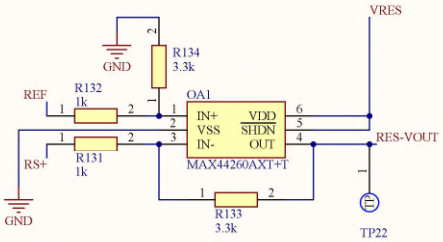

DIVISOR DIFERENCIAL

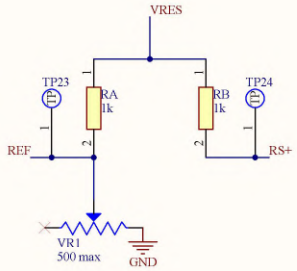

USB-B (SENSOR GRAFENO + UV)

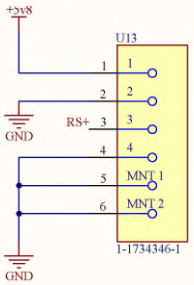

Title: *SENSOR RESISTIVO DE GRAFENO*		**Author:** MARIO DE MIGUEL	*
		Approved: ---	*
Size: A3	**Prj:** SENSACIONAL 2	**Edited:** 04/02/2026	*
Date: 04/02/2026 11:04:10	Sheet 5 of 7	**Variant:** [No Variations]	*
Git Hash: Not in version control		**SW Version:** 25.3.3.18	*
File: C:\Users\worbb\Desktop\IMA\PCB\Altium\SENSACIONAL - V2\S-GRAFENO.SchDoc			

SENSOR DE ONDAS DE ESPÍN - FPGA

LATTICE ICE40 ULTRA PLUS 5K

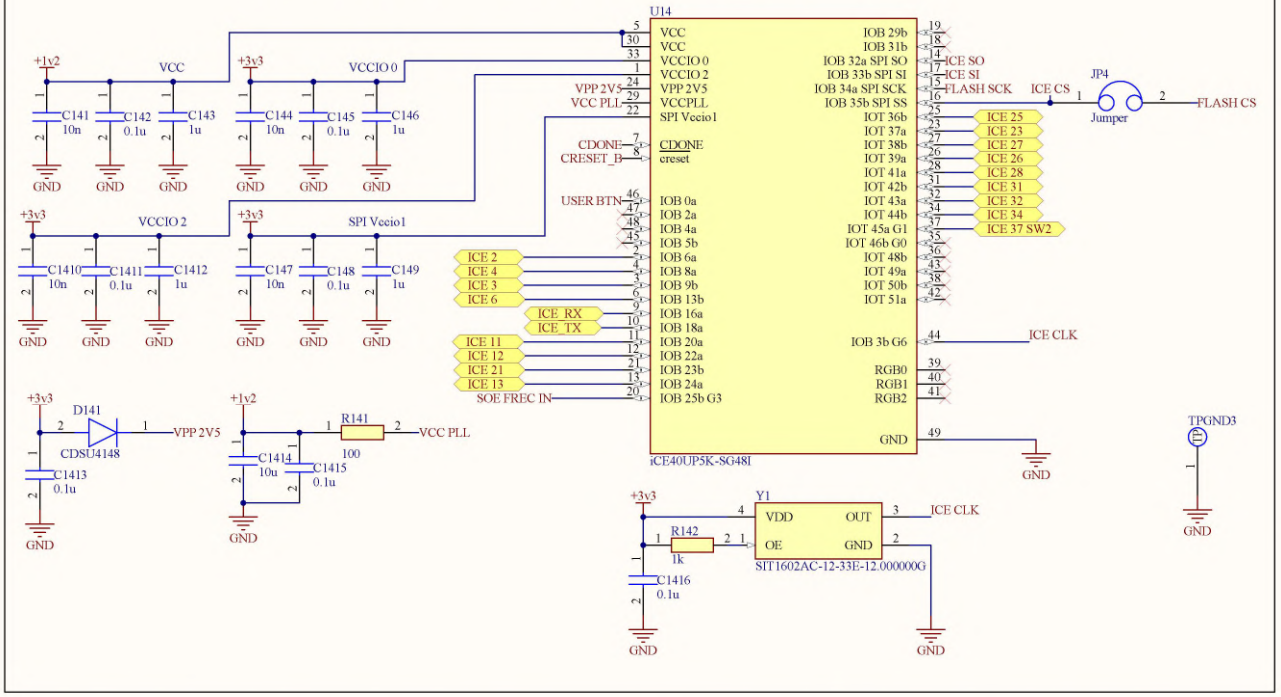

SPI FLASH

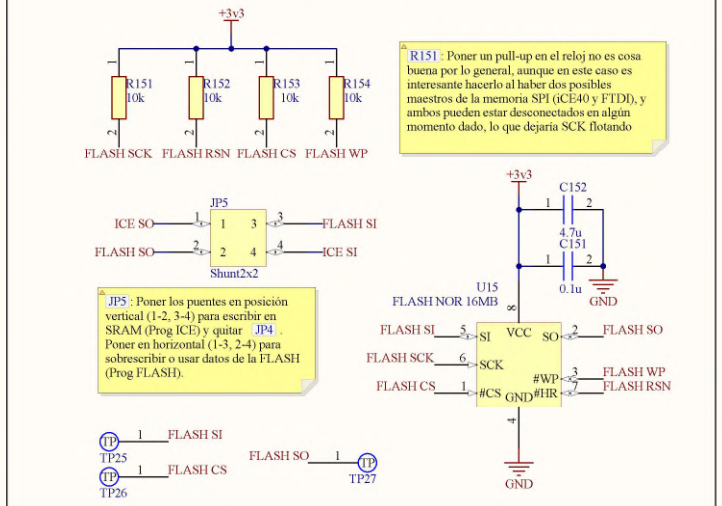

PROGRAMADOR SPI

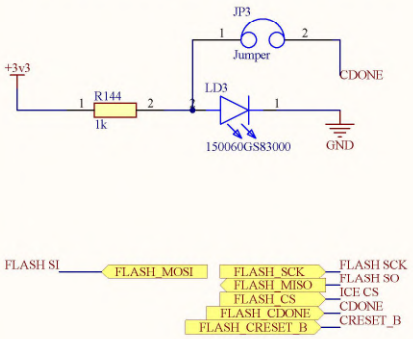

ETAPAS ANALÓGICAS + RF

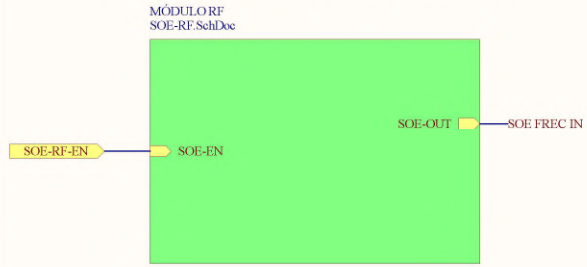

BOTONES (RESET, USUARIO)

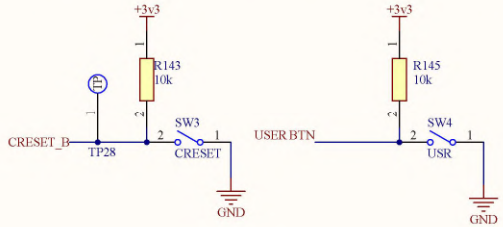

Title: *SENSOR DE ONDAS DE ESPÍN*		Author: MARIO DE MIGUEL	
		Approved: ---	
Size: A3	Prj: SENSACIONAL 2	Edited: 04/02/2026	
Date: 04/02/2026 11:04:10	Sheet 6 of 7	Variant: [No Variations]	
Git Hash: Not in version control		SW Version: 25.3.3.18	
File: C:\Users\worbb\Desktop\IMA\PCB\Altium\SENSACIONAL - V2\S-ONDAS-ESPIN.SchDoc			

S.O.E. - ETAPAS ANALÓGICAS

RF ON/OFF

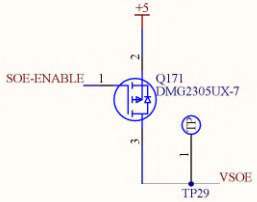

MÓDULO RF + FILTRO PASO BAJO

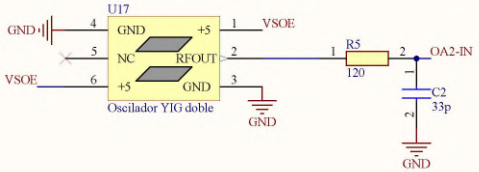

ETAPAS DE AMPLIFICACIÓN

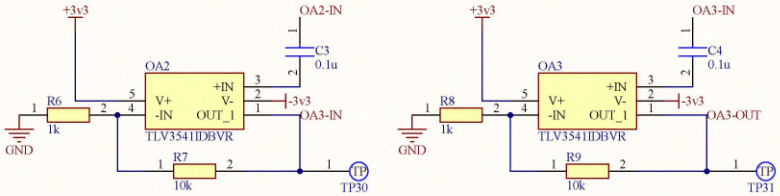

SUJECIÓN + BÚFER SCHMITT

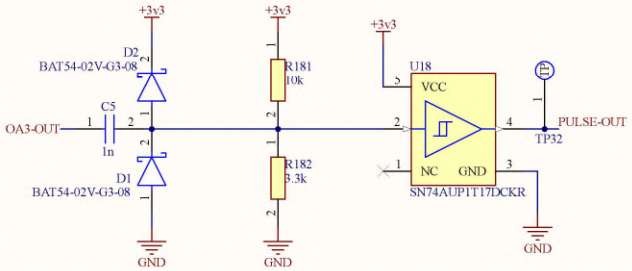

Title: *ONDAS DE ESPÍN - ANALÓGICAS*		**Author:** MARIO DE MIGUEL	
		Approved: ---	
Size: A3	**Prj:** SENSACIONAL 2	**Edited:** 04/02/2026	
Date: 04/02/2026 11:04:10	Sheet 7 of 7	**Variant:** [No Variations]	
Git Hash: Not in version control		**SW Version:** 25.3.3.18	
File: C:\Users\worbb\Desktop\IMA\PCB\Altium\SENSACIONAL - V2\SOE-RF.SchDoc			